Typical Truss Configuration

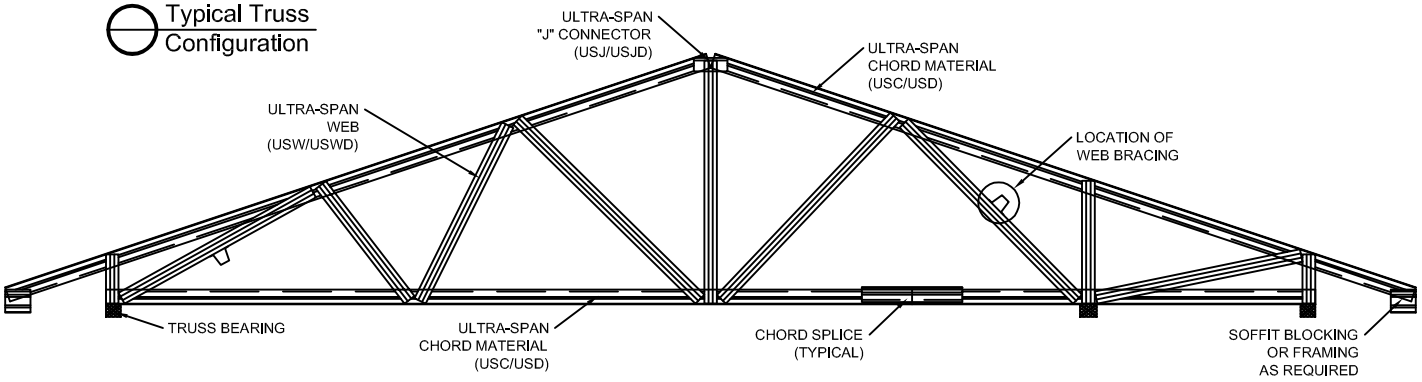

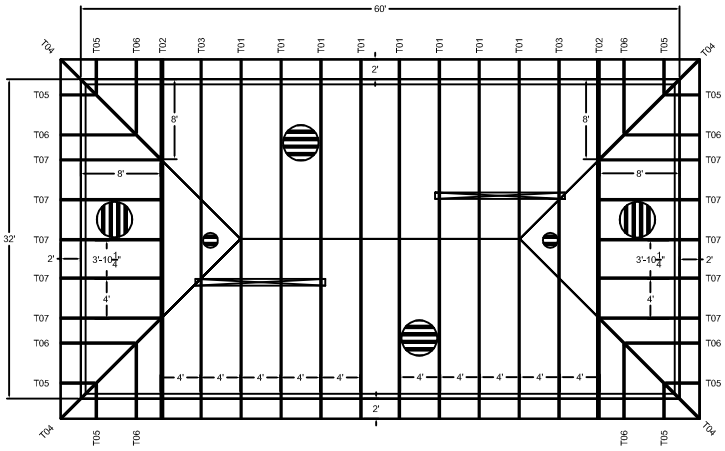

DRAWING NOTES:

14" X 22GA DECKING

X BRACE LOCATIONS

ALL TRUSS DIMENSIONING IS APPROXIMATE. INSTALLER TO VERIFY ALL DIMENSIONS ON SITE PRIOR TO INSTALLING TRUSSES

TRUSS LAYOUT
N.T.S.

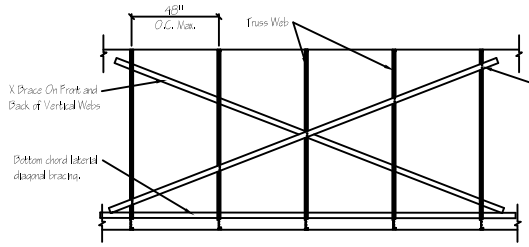

X Brace Detail

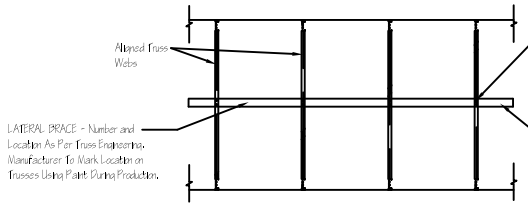

Web Brace Detail

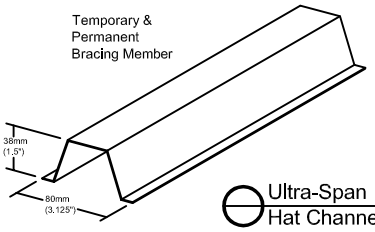

Ultra-Span Hat Channel

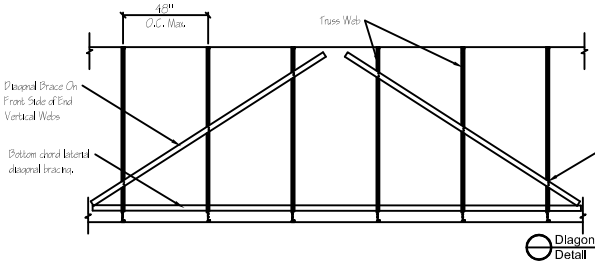

Diagonal Brace Detail

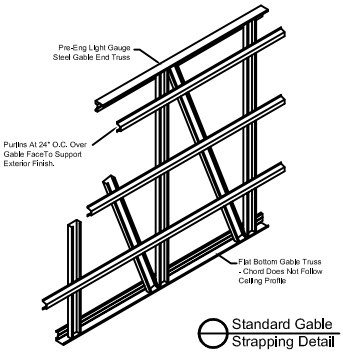

Standard Gable Strapping Detail

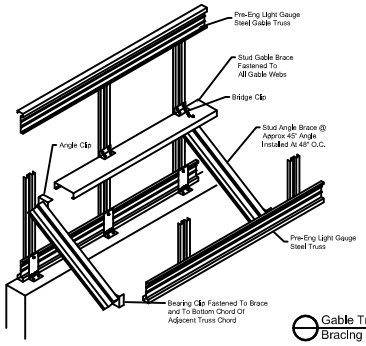

Gable Truss Wind Bracing Detail

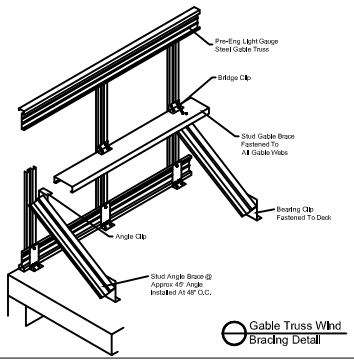

Gable Truss Wind Bracing Detail

Location: Standard	Roofing Assembly Bracing Details	4427 VanderWal Dr. P.O. Box 878 Petrolia On, NON 1R0 Toll Free: 1-877-251-6875 Fax: 519-882-4153 Email: info@trusses.ca	VanderWal Commercial Group
Scale: N/A			
Date: 2008	Design: JVW	Drawn: JV	